USN. [ ][ ][ ][ ][ ][ ][ ][ ][ ][ ] **[22MTASD101]**

FIRST SEMESTER M.Tech EXAMINATION, JANUARY - 2024

AEROSPACE STRUCTURES

Time: 3 Hours **Maximum Marks: 100**

Instructions:
- **i.** Answer **FIVE** full Questions. Question number 1 and 2 are compulsory. Each question carries 20 marks.
- **ii.** Missing data may be suitably assumed.

1. a. i. Discuss the types of loads and stresses on aircraft structures with the help of neat sketches. **7**

ii. What is difference Between Determinate and Indeterminate Structures? Draw neat sketches. **3**

b. What is the definition of a free-body diagram? **10**

The figure shows the bar of uniform cross-sectional area is acted upon by several forces. Find the deformation of the bar, assuming $E = 2 \times 10^5$ N/mm^2.

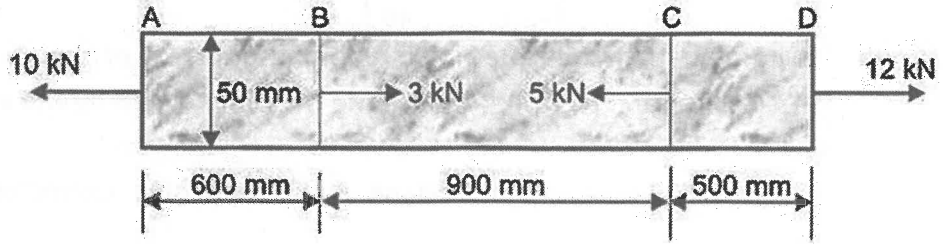

2. a. i. What is Strain Energy Density? Derive the strain energy expression for a general state of 3D state of stress. **04**

ii. Using the Strain Energy method determine the deflection under 60KN load for the beam shown in the Fig. **04**

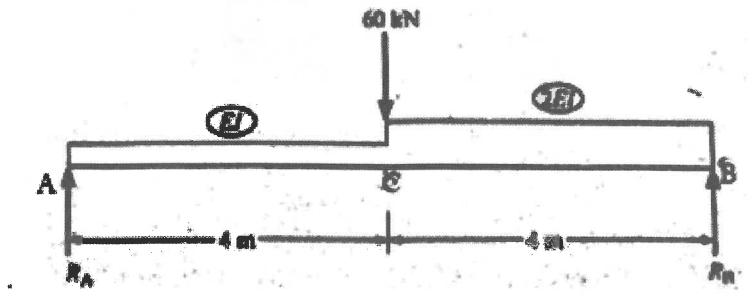

Fig. Simply supported beam with Point Load

b. Explain the Principle of Virtual work and State the principle of Virtual Forces and the Principle of Virtual displacements. Deduce the difference between the two methods. Explain why principe of virtual forces is difficult to apply in principle. **06**

06

The section shown in Fig. is subjected to bending moment Mx=30kNm.determine the bending stress at the corner points.

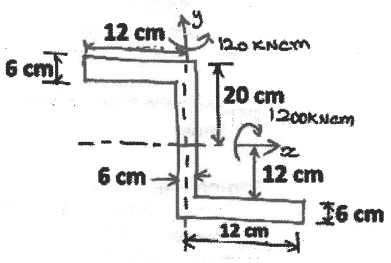

Fig. Section Beam subjected to Bending in two planes.

3. **a.** Suppose that someone indicates that the following functions define the variations in strain throughout a deforming body **04**

$$\varepsilon_{xx} = x^2y^2; \qquad \varepsilon_{xy} = x^2y^2; \qquad \varepsilon_{yy} = x^2y^2$$

Determine if they are an acceptable deformation for a body with finite dimensions in"x" and "y" direction.

The state of stress at a particular point relative to the xyz coordinate system is given by the stress matrix.

$$\begin{bmatrix} 15 & 10 & -10 \\ 10 & 10 & 0 \\ -10 & 0 & 40 \end{bmatrix} \text{MPa}$$

Determine the normal stress and the magnitude and direction of the shear stress on a surface intersecting the point and parallel to the plane given by the equation **06**

2x-y+3z=9

b. Distinguish between plane stress and Plane strain and give examples for the application of problems **04**

Derive the Equations of Equilibrium for a body undergoing 3D state of stress using Free body diagram approach. **06**

OR

4. **a.** Write all the Boundary conditions (Both Displacements and Stresses) on all faces of the beam indicated below: **04**

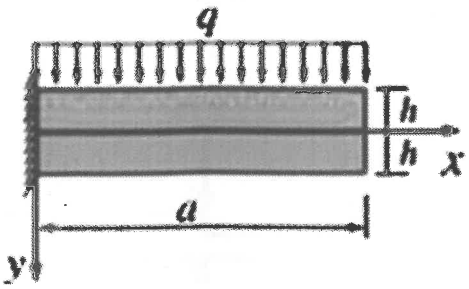

Given the state of strain defined by the strain tensor, Derive the six compatibility conditions by differentiation of the strain components. **04**

Show that:

$$\varepsilon_{xx} = c_1(x^2 + y^2); \;\; \varepsilon_{yy} = c_1(z^2 + y^2); \;\; \gamma_{xy} = c_2 xyz; \;\; \varepsilon_{zz} = \gamma_{xz} = \gamma_{yz} = 0$$ **02**

Where c_1 *and* c_2 are constants, is not a possible state of strain.

b. Given the following displacement field,

u = (xyz i + $3x^2yz$j+4yzk) x 10^{-2}

and a very small segment Δs having the following direction cosines before deformation: a_{sx}=0.200, ; a_{sy} = 0.800,; a_{sz}=0.555. **10**

This segment is directed away from the point (2,-1, 3). What is the new vector Δs' after the displacement field u has been imposed?

5. **a.** Obtain the following Shear flow equation for open-section beams **10**

$$q_s = -\frac{S_x}{I_{yy}}\int_0^s tx\,ds - \frac{S_y}{I_{xx}}\int_0^s ty\,ds$$

b. A cantilever beam shown in Figure carries concentrated loads as shown. Calculate the distribution of stiffener loads and the shear flow distribution in the web panels assuming that the latter are effective only in shear. **10**

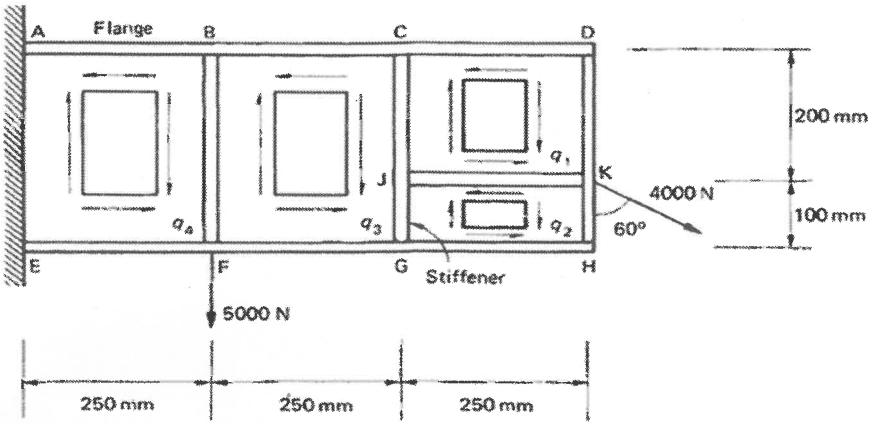

OR

6. **a.** The fuselage shown below having cross-sectional area of each stringer is 100 mm^2. If the fuselage is subjected to a bending moment of 200 kN-m applied in the vertical plane of symmetry, at the section, Calculate the direction distribution. **10**

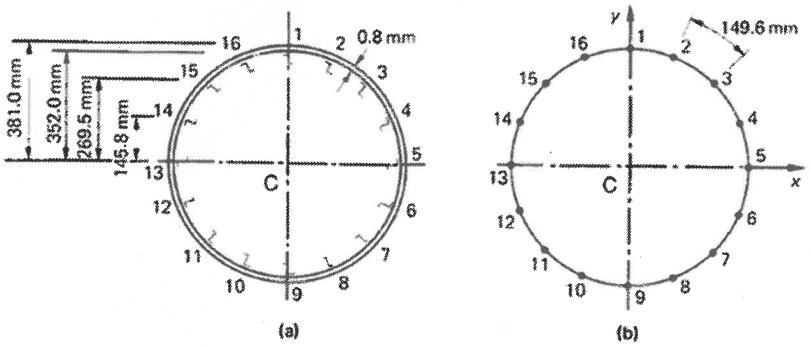

b. Determine the Euler buckling equation for a critical load of columns with both ends are pinned. **10**

7. **a.** Obtain the critical Buckling equation for thin plates subjected to compressive load **10**

b. Explain the Inelastic buckling of plates with the help of (a) Buckling coefficients for flat plates in compression; (b) buckling coefficients for flat plates in bending; (c) shear buckling coefficients for flat plates. **10**

OR

8. **a.** Determine the value of 'g' for 'Z' and the top hat section stiffener-skin combination. **10**

b. Explain the Instability of stiffened panels with the help of a neat sketch. **10**